Electrolux PROFESSIONAL

Modular Cooking Range Line thermaline 80 - 4-Burner Gas Top with Ecoflam, 1 Side

ITEM #

MODEL #

NAME #

SIS #

AIA #



588050 (MAGGAAHOPI) 4-Burner gas Top, ecoflam, one-side operated

Short Form Specification

Item No.

Unit constructed according to DIN 18860_2 with 20 mm drop nose top. Internal frame for heavy duty sturdiness in stainless steel. 2 mm top in 1.4301 (AISI 304). Flat surface construction, easily cleanable. THERMODUL connection system enables seamless worktop when units are connected and avoids soil penetrating. 4 gas burners with optimized combustion, flame failure device, thermocouple safety hand valve and protected pilot flame. Triple ring "flower" flame burners with anti-clogging design. Manual gas valves allow precise flame intensity control. Large pan support in cast iron with long center fins for various pan sizes. ECOFLAM pan detection system to save energy and to reduce unnecessary heat radiation in the kitchen. Deep flat spillage tray with rounded corners and drain hole. Metal knobs with embedded hygienic silicon "soft" grip enable easier handling and cleaning.
IPX4 water resistant certification.
Configuration: One-side operated top. The base needs to be supplied by the factory. Please include appropriate base.

Main Features

- Flame failure device on each burner protects against gas leakage when accidental extinguishing of the flame occurs.
- Large sized pan support in cast iron with long center fins to allow the use of the largest down to the smallest pans.
- Manual gas valves allow precise control of the flame intensity between high and low positions.
- Pans can easily be moved from one area to another without lifting.
- All major components may be easily accessed from the front.
- THERMODUL connection system creates a seamless work top when units are connected to each other thus avoiding soil penetrating vital components and facilitating the removal of units in case of replacement or service.
- Metal-covered knobs with embedded hygienic "soft-touch" grip for easier handling and cleaning. The special design of the controls prevents infiltration of liquids or soil into vital components.
- Burners with optimized combustion. Triple ring flower flame burners with anti-clogging design.
- Deep flat spillage tray with rounded corners and drain hole to facilitate cleaning.
- Patented Flower Flame burners that adjust to the size and form of the cookware (Patent EP2708813B1 and related family).

Construction

- Each burner equipped with thermocouple safety hand valve and protected pilot flame.
- 2 mm top in 1.4301 (AISI 304).
- Flat surface construction with minimal hidden areas to easily clean all surfaces
- Internal frame for heavy duty sturdiness in 1.4301 (AISI 304).
- IPx4 water protection.
- Unit constructed according to DIN 18860_2 with 20 mm drop nose top.
- Unit constructed according to DIN 18860_2 with 20 mm drop nose top and 70 mm recessed plinth.

Sustainability

- Model is supplied with Ecoflam pan detection system, which reduces energy consumption and unnecessary heat dispersion in the kitchen.

APPROVAL:

Optional Accessories

• Connecting rail kit, 800mm	PNC 912500	❑
• Portioning shelf, 800mm width	PNC 912526	❑
• Portioning shelf, 800mm width	PNC 912556	❑
• Folding shelf, 300x800mm	PNC 912577	❑
• Folding shelf, 400x800mm	PNC 912578	❑
• Fixed side shelf, 200x800mm	PNC 912583	❑
• Fixed side shelf, 300x800mm	PNC 912584	❑
• Fixed side shelf, 400x800mm	PNC 912585	❑
• Connecting rail kit: modular 80 (on the left) to ProThermetic tilting (on the right), ProThermetic stationary (on the left) to ProThermetic (on the right)	PNC 912971	❑
• Connecting rail kit: modular 80 (on the right) to ProThermetic tilting (on the left), ProThermetic stationary (on the right) to ProThermetic (on the left)	PNC 912972	❑
• Endrail kit, flush-fitting, left	PNC 913109	❑
• Endrail kit, flush-fitting, right	PNC 913110	❑
• Endrail kit (12.5mm) for thermaline 80 units, left	PNC 913200	❑
• Endrail kit (12.5mm) for thermaline 80 units, right	PNC 913201	❑
• T-connection rail for back-to-back installations without backsplash (to be ordered as S-code)	PNC 913227	❑
• Insert profile D=800mm	PNC 913230	❑
• Endrail kit, (12.5mm), for back-to-back installation, left	PNC 913249	❑
• Endrail kit, (12.5mm), for back-to-back installation, right	PNC 913250	❑
• Endrail kit, flush-fitting, for back-to-back installation, left	PNC 913253	❑
• Endrail kit, flush-fitting, for back-to-back installation, right	PNC 913254	❑
• Kit LPG nozzles for 4 burner (7 kW) gas 30/31	PNC 913286	❑
• Gas mainswitch for modular H800 gas units (factory fitted)	PNC 913698	❑

CE

The company reserves the right to make modifications to the products without prior notice. All information correct at time of printing.

Modular Cooking Range Line thermaline 80 - 4-Burner Gas Top with Ecoflam, 1 Side

Front

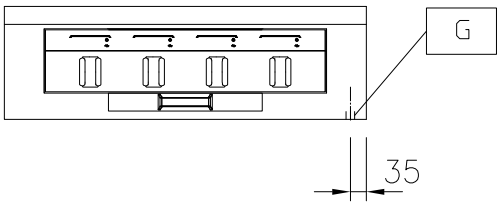

Side

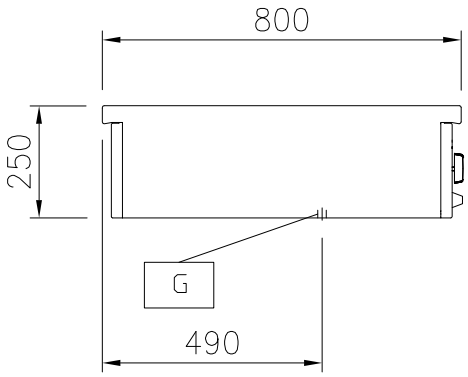

EQ = Equipotential screw
G = Gas connection

Top

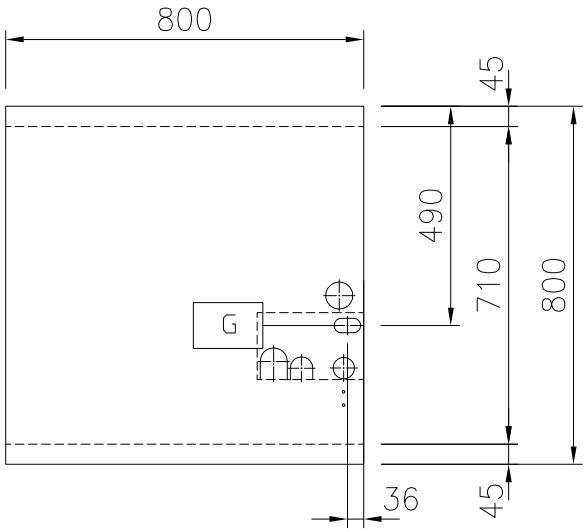

Gas

Gas Power:	28 kW
Gas Type Option:	
Gas Inlet:	1/2"

Key Information:

External dimensions, Width:	800 mm
External dimensions, Depth:	800 mm
External dimensions, Height:	250 mm
Net weight:	63 kg
Configuration:	One-Side Operated;Top
Front Burners Power:	7 - 7 kW
Back Burners Power:	7 - 7 kW
Back Burners Dimension - mm	Ø 70 Ø 70
Front Burners Dimension - mm	Ø 70 Ø 70

The company reserves the right to make modifications to the products without prior notice. All information correct at time of printing.

2026.11.19